FRP INTERNATIONAL

the official newsletter of the International Institute for FRP in Construction

Vol. 12, No. 2, April 2015

Editor
Kent A. Harries
University of Pittsburgh, USA

IIFC Executive Committee
President
Jian-Fei Chen
Queen's University Belfast, UK

Senior Vice President
Scott T. Smith
Southern Cross University, Australia

Vice President and Treasurer
Amir Fam
Queen's University, Canada

Vice Presidents
Rudolf Seracino
North Carolina State University, USA

Renata Kotynia
Technical University of Lodz, Poland

Webmaster
Peng Feng
Tsinghua University, China

Members-at-Large
Charles E. Bakis
Pennsylvania State University, USA

Emmanuel Ferrier
Université Lyon 1, France

Nabil Grace
Lawrence Technological Univ., USA

Tao Yu
University of Wollongong, Australia

Conference Coordinators
Xin Wang (APFIS 2015)
Southeast University, China

Jian-Guo Dai (CICE 2016)
Hong Kong Polytechnic University, China

Secretary
Raafat El-Hacha
University of Calgary, Canada

IIFC Conference Proceedings to be Indexed

Jian-Fei Chen and ***Kent A. Harries***

The IIFC is pleased to announce that Elsevier is now indexing post-2012 IIFC conference proceedings in the Scopus and Compendex indices.

Elsevier approached IIFC past president Prof. Larry Bank with the opportunity to include CICE conferences in the Scopus and Compendex indices. It was felt that this was a great benefit to our membership and to authors. Prof. Bank and current president Prof. Jian-Fei Chen requested that APFIS conferences also be included. We are pleased to announce that Elsevier agreed and IIFC formally granted permission for indexing.

With assistance from Professors Riadh Al-Mahaidi, Yu Tao and Raafat El-Hacha, proceedings of CICE2012, CICE2014 and APFIS2013 have been passed over to Elsevier for indexing. All future proceedings will also be indexed. This is an excellent development, benefiting IIFC, authors and future researchers who will have greater access to IIFC proceedings. It is our experience that once Elsevier begins indexing a source, other indexing resources follow, further increasing the impact of the conference series and the outstanding work of all the authors.

This retroactive indexing is an indication of the high standards of IIFC conference proceedings, and demonstrates that the IIFC, as the world's premier learned society for FRP composites in construction, is growing from strength to strength.

FRPRCS-12 and APFIS-2015

On behalf of the FRPRCS Steering committee and the International Institute for FRP in Construction (IIFC), it gives us great pleasure to invite you to participate in the Joint Conference of The 12th International Symposium on Fiber Reinforced Polymers for Reinforced Concrete Structures **(FRPRCS-12)** & The 5th Asia-Pacific Conference on Fiber Reinforced Polymers in Structures **(APFIS-2015)** which will take place in Nanjing, China, from December 14-16, 2015. For more information, please contact frprcs-apfis2015@seu.edu.cn or visit the joint conference website at: http://iiuse.seu.edu.cn/frprcs12_apfis2015/

Zhishen Wu, Conference Chair
Gang Wu and Xin Wang, Conference Co-Chairs
International Institute for Urban Systems Engineering/School of Civil Engineering
Southeast University

CICE 2014 Best Paper – New Construction

Long Term Bending Creep Behaviour of Thin-Walled CFRP Pretensioned High Strength Spun Concrete Poles Under Sustained Load

Giovanni Terrasi and Urs Meier
EMPA, Switzerland
giovanni.terrasi@empa.ch
urs.meier@empa.ch

Introduction and Aim

Driven by the need for more durable and sustainable concrete structures, careful selection, design, and optimization of both the concrete mixes and the reinforcing materials used is now commonplace within the precast concrete industry. An example of this is the use of precast CFRP pretensioned High Performance Spun Concrete (HPSC) members for lighting poles and electrical power line masts (Terrasi, 2013). The combination of CFRP and HPSC along with an appropriate interface between them (i.e. an epoxy-bonded sand-coating on the CFRP) allow minimisation of the weight of prestressed elements by reducing concrete cover and wall thickness while providing excellent serviceability (corrosion resistance, high stiffness and fatigue strength). However, the performance of these HPSC precast elements under long term bending creep loads is still not well known. When the authors started their research on the mechanical behaviour and production technology of slender CFRP prestressed spun concrete (Terrasi, 1998) the durability and creep resistance of such structures was an early and major concern, too (Terrasi et al., 2002). Creep test data were already available for the individual components such as the unidirectional CFRP pultrusion profiles or the epoxy and adhesives, but long term data for a slender pole as a structural element with its new material combination were still missing. Therefore, in 1996, the authors started a unique and still ongoing experiment with prestressed poles under permanent bending loads. The goal of the study was the proof of long term stability of the poles even under elevated loads with a setup able to expose all different kind of time dependent failure mechanisms (stress relaxation in the tendons, bond failure, stress corrosion, concrete creep). The chosen load levels were 36%, 50%, and 72% of the short term failure moment. The first failure of a pole after 16.5 years proved the plausibility of the applied load levels in order to show the limits given by the bond strength between CFRP-tendons and concrete.

Materials and Experimental Program

The structural elements in the current study were CFRP prestressed concrete cylinders. 3.0 mm diameter, pultruded, alumina sand-coated CFRP prestressing tendons were used. The carbon fiber used was T700S by Toray Japan with a volume fraction of 72% and the tendons had an epoxy polymer resin matrix with a glass transition temperature, T_g, of 110 °C. The tendons' average experimental tensile strength was 3375 MPa with an elastic modulus E_{11} of 180.7 GPa and an average ultimate strain of 1.87% (Terrasi, 1998). One should note that the carbon fibre T700S has a guaranteed ultimate tensile strain of 2.1%, which could not be reached in tensile testing due to premature anchorage failure. In order to increase bond to the concrete, the tendons' surface was coated with an epoxy (type Scotch Weld 2216 by 3M, average layer thickness 0.25 mm) bonded layer of 0.5 mm diameter Al203 sand granules (with a compressive strength of 4000 MPa). Additionally, a novel kind of shear reinforcement was used for the poles consisting of a CFRP tape spiral with polyamide matrix of pitch 40 mm and cross-section 7 mm x 0.3 mm (Terrasi, 1998) (Fig. 1). The low density, excellent stress-corrosion resistance, and low creep and relaxation of CFRP are well known (Uomoto, 2001). The above properties make unidirectional CFRP tendons particularly suitable as prestressing reinforcements for concrete elements (Burgoyne, 1997).

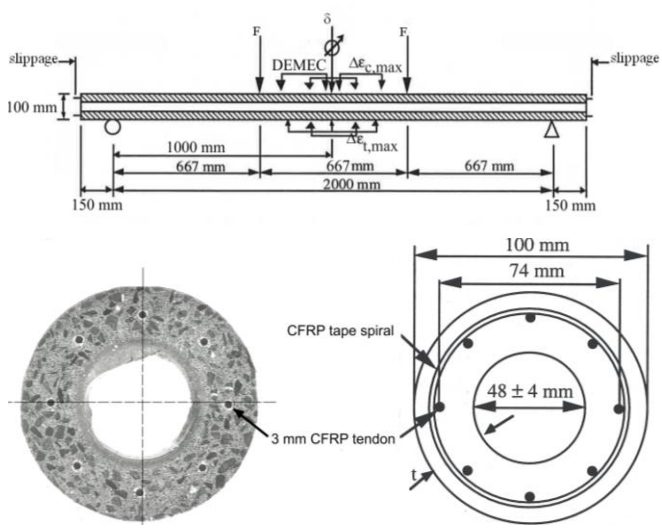

Fig. 1 Cross-section of CFRP prestressed pole specimens and bending load arrangement.

The current study used a high performance, centrifugally cast concrete (HPSC) of strength class C115 (minimum 150mm cube strength after 28 days of 115 MPa); this material is used for producing slender precast, prestressed poles and pylons in Switzerland (Terrasi, 2013). The HPSC is characterized by a precise grain size distribution of selected 0-6 mm quartz sand aggregates, with a cement content of 600 kg/m³ (CEM I 52,5 R). Silica fume (54 kg/m³ were added), and high performance superplasticizers play a key role in the mix. This particular HPSC mix design allows for optimum spinning of thin-walled cylinders at water/(cement+silica fume) ratios in the range of 0.31-0.32. Concrete compaction was carried out by centrifugation for 15 minutes with a maximum revolution speed of 800 rpm in a pretensioning-spinning mould (Terrasi, 1998). Prestress was released after 2 days and then the elements were demoulded. The pole specimens were then kept in a 20°C/90% R.H. chamber for 7 days and thereafter left to cure under indoor ambient conditions.

Five thin walled (25-27 mm total thickness) 2.3 m long cylindrical specimens (poles) with an outer diameter of 100 mm were centrifugally cast by precaster SACAC AG in Lenzburg, Switzerland (Fig. 1 and Table 1). These cross-section dimensions correspond to the smallest lighting pole cross-section produced by SACAC for the European market. The eight CFRP tendons were stressed to an initial prestress of 1600 MPa leading to a central HPSC prestress of 12.5 MPa after 28 days. The CFRP prestress wasn't monitored after demoulding but the prestress losses were analytically estimated to be 16.8% after 28 days from centrifugation. This was calculated considering the experimentally determined E-modulus for the HPSC after 2 days from production (30 GPa), the exp. determined shrinkage strain of the concrete (0.0007 after 28 days) and the exp. determined creep coefficient (0.62) of the concrete under similar central compression at 20°C and 70% R.H. The tendons were evenly distributed on a circle with diameter 74 mm, had a cover of 11 mm and a tendon-to-tendon clear distance of 25 mm. Three DEMEC strain gauges were placed on the tensile and compressive edge in the center-span (base length 200 mm, accuracy ±0.002 mm) while midspan deflections δ was measured with an LVDT in the quasi-static bending tests and by a mechanical gauge in the bending creep tests (both with accuracy ±0.02 mm). Slippage of the top and bottom CFRP tendon (next to the compressive and tensile edge respectively) was monitored at the poles' end surfaces with the aid of a sliding calliper (accuracy ±0.1 mm). Crack positions and crack widths were recorded during the tests with the aid of a crack microscope with accuracy ±0.02 mm, which was applied on the pole surface 20 mm under the horizontal axis of symmetry of the cylinder.

Poles 7 and 8 were tested in quasi static 4-point bending at age 28 days, with lever arms of 667 mm, a span of 2000 mm and 150 mm of overhang on each end (Fig. 1). In the main long term experiment Poles 12, 13 and 14 were tested from age 28 days onwards with the same span and load arrangement in outdoor 4-point bending creep tests (Fig. 1). In the outdoor bending creep experiments concrete blocks of known mass were hung in the 2 thirds-points of the pole specimens. Lead plates fixed thereon allowed the precise adjustment of the selected load level, taking into account the mass of the steel loading devices (Fig. 4). Pole 12 was loaded with a constant bending moment of 2.07 kNm, which is just below the short-term cracking

Table 1 Experimental program and main test results.

Pole	CFRP prestress (MPa)	Test	Cracking moment (kNm)	Creep moment (kNm)	Failure moment (kNm)	Time to failure (h or y)	Midspan deflection at failure (mm)	$\Delta\varepsilon_{c,max}$ (‰)	$\Delta\varepsilon_{CFRP,max}$ (‰)	Failure mode
7	1600	quasi static	2.58	n.a.	5.76	1 h	66.4	-0.00537	0.01055	HPSC crushing
8	1600	quasi static	2.41	n.a.	5.53	1 h	70.6	-0.00590	0.01133	HPSC crushing
12	1600	creep	2.07	2.07	none	running	n.a.	-0.00237	0.00155	none
13	1600	creep	n.a.	2.80	none	running	n.a.	-0.00414	0.00392	none
14	1600	creep	n.a.	4.07	4.07	16.54 y	68.6*	-0.00684*	0.00927*	bond

* obtained 1.4 years before failure

moments measured in the flexural test of Pole 7 and Pole 8 (2.41 – 2.58 kNm, Table 1). The bending creep moment of Pole 13 (2.8 kNm) corresponded to the maximum short-term service moment of a 5-meter high lighting pole under wind load (SN 505 160, 1989) and was just above the short-term cracking moments. The highest loaded specimen Pole 14 was loaded (considering self-weight) with a bending moment of 72% of the average short-term failure moment determined in the flexural tests of Poles 7 and 8 (5.65 kNm, Table 1).

Results and Discussion

Table 1 shows the main test results of the two short-term bending tests to failure of the reference Poles 7 and 8, and of Poles 12, 13 and 14 tested in bending creep. Unfortunately the maximum creep deflection and maximum creep strain values for Pole 14 were lastly taken 1.4 years before failure. Furthermore, the maximum bending strain $\Delta\varepsilon_{CFRP,max}$ of the outermost CFRP tendon (near the tensile edge of the pole) is not measured directly, but can be calculated by the measured values of the maximum compression strain at the top edge of the pole $\Delta\varepsilon_{c,max}$ and the maximum tensile strain at the lower edge $\Delta\varepsilon_{t,max}$ (Fig. 1). These last two strains were both determined by measuring over the three DEMEC gauges with base length of 200 mm. In this case the assumption is that 'plane sections remain plane' during loading, which was experimentally proven in (Terrasi, 1998) to be a valid assumption.

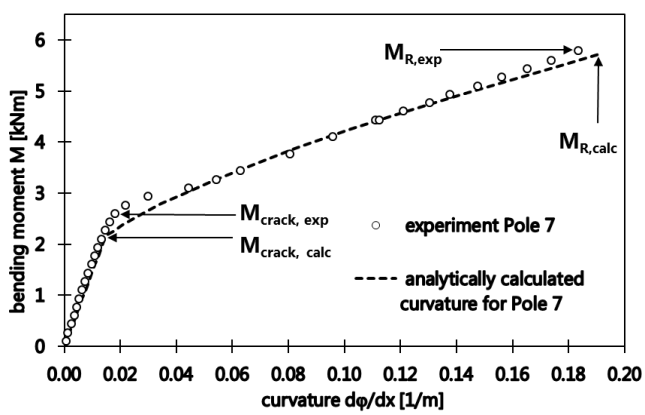

Fig. 2 Quasi-static bending moment vs. curvature behavior of CFRP prestressed HPSC Pole 7.

The short term bending behavior was assessed in quasi static 4-point flexural tests of Poles 7 and 8. Both specimens showed an approximately bilinear load-deflection behavior with considerable deflection until failure by crushing of the HPSC compression zone. The crushing strains of the HPSC are remarkably high and reached an average value of 0.006 (see $\Delta\varepsilon_{c,max}$ in Table 1 on top of which the initial concrete strain due to prestress of 0.00036 has to be added). The high values $\Delta\varepsilon_{CFRP,max}$ of the outermost CFRP tendons (around 0.011, Table 1) show that the outermost tendon reaches considerable tensile stresses if one takes into account that the tendon strain resulting from prestress after 28 days is 0.073 (considering prestress losses (Terrasi, 1998)). Fig. 2 shows the experimental moment vs. curvature diagram for Pole 7, with the curvatures in the zone of pure bending derived from the strain measurements on the top and bottom flanges during flexure. In the lower part of the diagram the pole remained uncracked till the bending stresses overcame the centric prestress and the tensile strength of the HPSC (which was determined to be 10.9±1.3 MPa in standard three-point bending tests of unreinforced spun cylinders of age 28 days). The kink in the moment-curvature curve was caused by the formation of the first bending cracks in the tensile zone of the central pole span. With the load increasing, the number of cracks in the central span increased, and the cracked zone developed from the central span to the shear spans. Therefore, the curvature (and deflection) increased considerably. The experimental curvatures in the cracked state and the failure moment at HPSC crushing could be predicted well by analytically calculated values following the direct cross-sectional analysis described in (Terrasi, 1998).

The main aim of this work was studying the long term behavior of the structural elements. The time-dependent load and deformation behavior of the CFRP prestressed HPSC Poles 12, 13 and 14 was studied in three 4-point bending creep tests performed outdoors between December 1996 and July 2013. Fig. 3 shows the creep deflection at midspan vs. time for the three poles loaded at the 3 different load levels of Table 1. The midspan deflections of the specimens show a rapid increase during the first 6 months after loading. This is followed by a rather slow increase of deflections, which increase slightly during the warmer summer months, while they keep stable during the colder part of the year. A possible explanation for this would be the fact that creep of the HPSC under sustained bending compression and HPSC shrinkage are accelerated by higher temperatures.

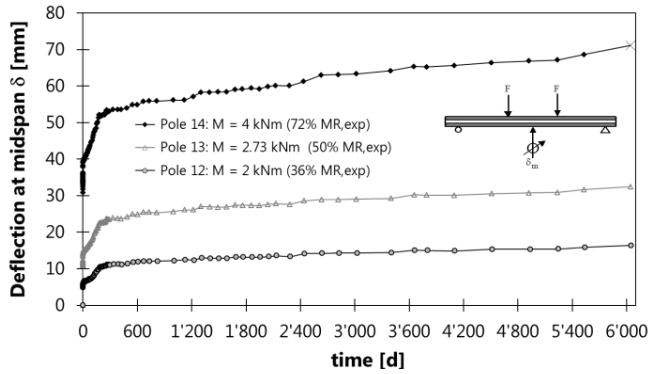

Fig. 3 Bending creep tests of Poles 12, 13 and 14: Creep deflection at midspan vs. time.

The two less loaded Poles 12 (loaded with the maximum long-term design bending moment for a pole after (SN 505 160, 1989)) and 13 did not fail during the long term test; both experiments are still running and will be monitored in the years to come. The highest loaded specimen Pole 14 sustained a bending moment of 72% of the short-term bending failure moment for 16.5 years before failing July 4th 2013 due to bond failure of the bottom tendon, which led to local crushing of the HSPC in the ninth crack section located 0.76 m from the left pole end (Fig. 4). The debonding of the Al203 sand coating from the CFRP tendon surface could be clearly observed at the tendon end and by carefully removing the HPSC cover at the tensile edge of the failed cross-section of Pole 14 (Fig. 5, left part of the tendon). Note that this highest loaded CFRP tendon of Pole 14 was strained to 0.0136 (2457 MPa) at the beginning of the creep test and that 1.4 years before failure its strain increased to 0.01628 (2942 MPa). This increased tendon stress was calculated from the measured values of $\Delta\varepsilon_{c,max}$ at the top edge and $\Delta\varepsilon_{t,max}$ at the lower edge of the pole and shows the stress redistribution over the section due to bending creep and crack growth. It is hypothized that this increased bottom tendon strain and the coating's bond creep led to the CFRP anchorage failure by debonding of the Al203 sand coating from the CFRP tendon surface after 16.5 years.

Slippage monitoring for the top and bottom CFRP tendon ends of Poles 12 and 13 (next to the poles' compressive and tensile edge, respectively) showed a limited draw-in of the tendons between 0.8 – 1.6 mm (top tendons) and 0.8 -1.1 mm (bottom tendons) in 16.5 years. It is hypothized that one part of these slippages is an artifact caused by erosion of the epoxy matrix of the tendon free ends by UV radiation. This was confirmed by optical microscope analysis of the free tendon ends, which showed a clear erosion after 16.5 years. Therefore the effective draw-in of the highest tension-loaded (bottom) tendons is assumed to be considerably less than the measured 0.8 -1.1 mm. This limited tendon slippage is a proof for the long-term durability of the bond between HPSC and CFRP in mid-European climatic conditions, achieved through Al203 sand coating of the CFRP surface: Bond creep at the HPSC / CFRP interface is thus very limited over 16.5 years. This result confirms the above hypothesis that creep and shrinkage of the HPSC are controlling the long-term deformations of the pole specimens.

Fig. 4 Failure of Pole 14 due to slippage of the lowest CFRP tendon in the tensile zone on the left end of the pole, which led to local crushing of the high strength spun concrete.

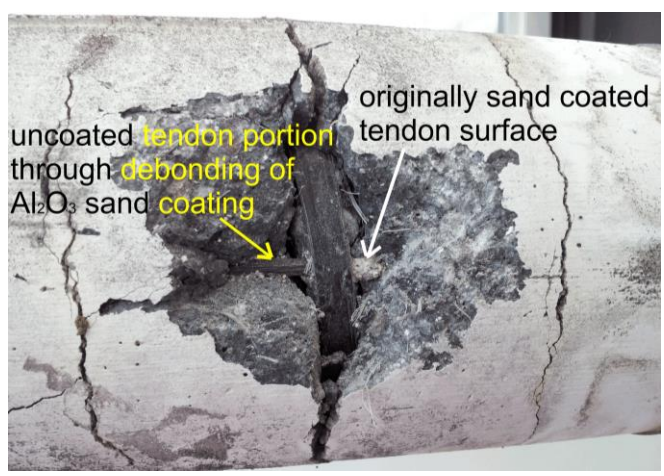

Fig. 5 Detail of tensile edge of failed cross-section of Pole 14 after removing HPSC cover/

Conclusions

The following conclusions can be drawn on the basis of the test results briefly described in this paper:

The long term bending behavior of the CFRP prestressed HPSC pole studied is satisfactory under realistic service moments, which follows from the low creep deflections after 16.5 years for the lowest loaded Pole 12 in the test series presented. Long-term curvatures and deflections stabilize after 6 months of sustained loading. Furthermore, the pole specimens loaded with 36% and 50% of the short term failure moments showed crack patterns which were stable over time, and minimal slippage of the tendons with respect to the pole's end faces. The latter proves the successful and durable anchorage of the Al203 sand coated CFRP prestressing tendons of this study in thin-walled precast concrete members under sustained long-term service loads.

Pole 14, which was loaded with twice the maximum long term service moment, failed after 16.5 years due to bond failure of the highest loaded CFRP tendon.

Acknowledgements

The authors would like to thank SACAC Schleuderbetonwerk AG. This research was also funded by EMPA and by the Swiss Commission for Technology and Innovation, to which we are very grateful.

References

Burgoyne CJ (1997) Rational Use of Advanced Composites in Concrete, *Proceedings of the 3th International Symposium of Non-Metallic (FRP) Reinforcement for Concrete Structures (FRPRCS-3)*, Sapporo, 14-16 October 1997, pp. 75-88.

SN 505 160 (1989) Swiss Engineering Standard, "Loads on Structures". *Swiss Standard SIA 160*, 56 pp.

Terrasi G, (1998) CFRP prestressed spun concrete poles (Mit Kohlenstofffasern vorgespannte Schleuderbetonrohre), *Ph.D. thesis*, ETH Zurich No. 12'454, Switzerland, pp. 1–306

Terrasi G, Baettig G, Broennimann R. (2002) Pylons made of high-strength spun concrete and prestressed with carbon fibre reinforced plastic for high power transmission lines, *International Journal of Materials and Product Technology*, **17**(1-2), pp 32-45.

Terrasi G. (2013) Prefabricated Thin-walled Structural Elements Made from High Performance Concrete Prestressed with CFRP Wires, *Journal of Material Science Research*, **2**(1), pp. 1-10.

Uomoto T, (2001) Durability Considerations of FRP Reinforcement, *Proceedings of the 5th International Symposium of Non-Metallic (FRP) Reinforcement for Concrete Structures (FRPRCS-5)*, Cambridge, 16-18 July 2001, pp. 17-32.

IIFC Webinars

Emmanuel Ferrier, Université Lyon 1
Chair, IIFC Education Task Group
emmanuel.ferrier@univ-lyon1.fr

The IIFC webinar series consists of short – one hour – online seminars on specialized topics. Each webinar contains commentary, an annotated dashboard, details on calculation methods described and allows participant interaction. All webinars are free to the public.

2015 Webinar Series

January 2015 - *FRP material for strengthening of structures in the field of construction, mechanical properties and bond*, E. Ferrier, University LYON1, France.

http://bigbb.univ-lyon1.fr/playback/presentation/playback.html?meetingId=5a75fe0cd68c10a3d70da61d31765b53e18e9c4e-1420729042717

January 2015 - *RC beam strengthened for flexure*, E. Martinelli, University of Salerno, Italy.

http://bigbb.univ-lyon1.fr/playback/presentation/playback.html?meetingId=5a75fe0cd68c10a3d70da61d31765b53e18e9c4e-1421247425198

February 2015 - *RC beam strengthened for shear*, J. Barros, University of Minho, Portugal.

http://bigbb.univ-lyon1.fr/playback/presentation/playback.html?meetingId=5a75fe0cd68c10a3d70da61d31765b53e18e9c4e-1424954795316

April 2015 - *Field applications of FRP in bridges in Australia*, R. Al-Mahaidi, Swinburne University of Technology Australia.

http://bigbb.univ-lyon1.fr/playback/presentation/playback.html?meetingId=5a75fe0cd68c10a3d70da61d31765b53e18e9c4e-1427900280960

10 April 2015 @ 1400 UCT - *Development of Standard Design Equations for Pultruded GFRP Members Subject to Compression*, K. Harries, University of Pittsburgh, USA.

April 2015 - *Durability of FRP*, B. Benmokrane, University of Sherbrooke, Canada.

April 2015 - *Seismic behavior of structures strengthened by FRP*, T. Triantafillou, University of Patras, Greece.

June 2015 - *Fire behavior of RC structures, case of FRP strengthening*, L. Bisby, University of Edinburgh, UK

Check the IIFC website for updates, dates, times and web links. www.iifc-hq.org.

Please connect to webinars 5 minutes before the scheduled start time. Webinars will be archived and available through the IIFC website.

Composites Around the World

FiberCore Europe installs two new bridges

www.fibercore-europe.com

On 12 January, the wooden bridge deck of the bascule ***Friesebrug*** in Alkmaar, Netherlands, was replaced with a span incorporating an FRP deck featuring InfraCore®Inside technology (right). Situated at the entrance to the city of Alkmaar, the Friese Bridge is used by all types of traffic. The use of the FRP reduced the weight of the bridge leaf providing many advantages when opening and closing the bridge. In addition, the FRP deck provides protection for the underlying steel construction against water and de-icing salt reducing maintenance demands. Gebr. Griekspoor BV were the principal contractors for this project.

The movable part of the new ***Spiering Bridge***, featuring a light-weight bridge leaf constructed using InfraCore®Inside technology, was installed over the river Vecht 14 January, 2015. The Spiering bridge is an essential link for local traffic in the Weesp and Muiden (Netherlands) area.

The bridge leaf is made of FRP attached to a steel girder on either side (green in the photograph below) The finish of leaf is a wear layer; an additional tarmac layer is not required.

This bridge leaf is one of a number of movable bridges that have been constructed using lighter and maintenance-friendly FRP materials. This trend in movable bridges represents a successful combination of FRP and steel. The properties of these materials complement each other, allowing ease of bonding. This has already been illustrated on by the 142 metre long traffic viaduct near Lunetten (Netherlands) and by a number of lock gates.

The fibre-reinforced polymer bridge leaf was manufactured by FiberCore Europe. The steel construction for this project was executed by Jansen Venneboer (Wijhe, Netherlands). The principal contractors for the project were K. Dekker B.V. / Ooms Construction B.V.

The FRP leaf was connected to the steel at the Rotterdam-based production facility of FiberCore Europe. The assembled bridge leaf was shipped by water from Rotterdam to Nigtevecht on the Amsterdam-Rijn canal, it was forwarded to Muiden in the morning of 14 January, 2015.

Happy 50th Birthday, Kevlar!

www.dupont.com

DuPont is celebrating the 50th anniversary of a widely popular advanced material – Poly-paraphenylene terephthalamide, better known as Kevlar®. First discovered by Stephanie Kwolek while researching for a new lightweight strong fiber to use for tires, the material has been used in countless applications over the last five decades from personal protective gear to paint to dog toys (and the editor's favourite: ice hockey socks that protect one's calves from errant skate blades.)

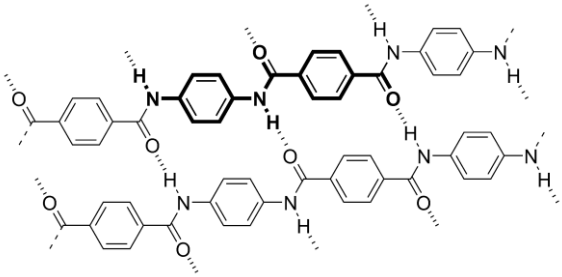

Recent Theses and Dissertations

For additional information or copies of these theses, please contact Dr. Mina Dawood at the University of Houston: mmdawood@central.uh.edu

An experimental study on repair of steel bridge piles using GFRP concrete-filled jacket

A. Kaya
MS Thesis (2014), University of Houston
Advisors: B. Gencturk and M. Dawood

Many bridges and structures in the United States that are supported on steel piles exhibit inadequate strength due to increasing load demand and aging due to corrosion The combination of increased load demand and reduction of capacity due to corrosion-induced section loss can lead to unexpected buckling of the piles. Several techniques are available to repair these structures to meet the increasing demand and enhance their safety. This thesis investigates the effectiveness of a glass fiber reinforced polymer (GFRP)-based system for rapid repair of buckled steel piles. The system consists of a GFRP tube, which is formed on-site and subsequently filled with an expansive concrete. Thirteen-buckled steel H-piles with varying degrees of section loss to simulate corrosion were repaired and tested to failure under axial loading. The research results show that the repair system can restore the capacity of the piles comparable to the undamaged conditions.

Calibration of ϕ factors for CFRP prestressed bridge girders

F. Forouzannia
MS Thesis (2014), University of Houston
Advisors: B. Gencturk and M. Dawood

Calibration of the flexural resistance factors in the American Association of State Highway and Transportation Official's (AASHTO) Load and Resistance Factor Design (LRFD) format is performed for bridge girders prestressed with Carbon Fiber-Reinforced Polymers (CFRP). The underlying principle of the LRFD design is to achieve a uniform probability of failure (target reliability) for all possible design scenarios, which is achieved through resistance and load factors. Calibration of the resistance factors requires an extensive design space to be applicable to different design scenarios. For this purpose, 12 design cases with various span lengths, girder positions, girder spacing, roadway widths, and failure modes were considered. The load and resistance model random variables and their statistics, flexural resistance model accuracy, and the results of Monte Carlo simulation through which resistance factors were derived for different target reliabilities for interior and exterior girders failing in tension and interior girders failing in compression are presented.

Bond behavior between steel and high modulus CFRP plates at moderately elevated temperatures

M.U. Sahin
MS Thesis (2014), University of Houston
Advisor: M. Dawood

This thesis presents the findings of a research study that was conducted to assess the effect of moderately elevated temperatures, up to 50°C, on the bond behavior of steel beams strengthened with externally bonded carbon fiber reinforced polymer (CFRP) plates. In the first phase of the research, five steel-CFRP bonded double-lap shear coupons were tested at different temperatures to characterize the bond behavior. In the second phase of testing steel beams were strengthened with different configurations of high modulus CFRP plates and subjected to different combinations of applied load and ambient temperature. The temperature ranges considered were selected to represent typical environmental conditions experienced by many steel bridges and structures in different environments. The parameters that are considered in this study include the length of the CFRP plate and the combined effect of mechanical and thermal load.

New Publication

ACI SP-301 Modeling of FRP Strengthening Techniques in Concrete Infrastructure

This CD contains 8 papers that were presented at a session sponsored by Joint ACI-ASCE technical committee 447 at the ACI Fall Convention, October 2011 in Cincinnati, Ohio. The papers cover the modeling for strengthening for flexure, shear, torsion, and confinement of concrete. Where applicable, the papers cover comparisons of modeling results with experimental tests performed around the world.

Document may be ordered at:
http://www.concrete.org/store/productdetail.aspx?ItemID=SP301CD&Format=OPTICAL_DISK

ASCE *Journal of Composites for Construction*

The American Society of Civil Engineers (ASCE) Journal of Composites for Construction (JCC) is published with the support of IIFC. As a service to IIFC members and through an agreement with ASCE, *FRP International* provides an index of ASCE JCC. The ASCE JCC may be found at the following website:

http://ascelibrary.org/cco/

ASCE JCC subscribers and those with institutional access are able to obtain full text versions of all papers. Preview articles are also available at this site. Papers may be submitted to ASCE JCC through the following link:

http://www.editorialmanager.com/jrncceng/

ASCE Journal of Composites for Construction
Volume 19, No. 1. February 2015.

Debonding Mitigation of CFRP-Strengthened Steel Beams with Silyl-Modified Polymer and CFRP Wrap Anchorage

Yail J. Kim, Thushara Siriwardanage, and Jae-Yoon Kang

Seismic Behavior of RC Shear Walls Strengthened for In-Plane Bending Using Externally Bonded FRP Sheets

Carlos A. Cruz-Noguez, David T. Lau, Edward G. Sherwood, Stylianos Hiotakis, Joshua Lombard, Simon Foo, and Moe Cheung

Introduction of a Stress State Criterion to Predict Bond Strength between FRP and Concrete Substrate

S. Ueno, H. Toutanji, and R. Vuddandam

Shear Strength of FRP Reinforced Concrete Members with Stirrups

A. Ghani Razaqpur and Saverio Spadea

Concrete Damage Plasticity Model for Modeling FRP-to-Concrete Bond Behavior

Y. Tao and J. F. Chen

Extending the Fatigue Life of Reinforced Concrete T-Beams Strengthened in Shear with Externally Bonded FRP: Upgrading versus Repairing

Georges El-Saikaly and Omar Chaallal

Effect of Longitudinal Steel Ratio on Behavior of RC Beams Strengthened with FRP Composites: Experimental and FE Study

T. H. Almusallam, H. M. Elsanadedy, and Y. A. Al-Salloum

Influence of Slenderness on Stress-Strain Behavior of Concrete-Filled FRP Tubes: Experimental Study

Thomas Vincent and Togay Ozbakkaloglu

Punching Shear Behavior of Two-Way Slabs Reinforced with FRP Shear Reinforcement

Mohamed Hassan, Ehab A. Ahmed, and Brahim Benmokrane

Strengthening of Reinforced Concrete Arches with Externally Bonded Composite Materials: Testing and Analysis

Ehab Hamed, Zhen-Tian Chang, and Oded Rabinovitch

Simplified Model for the Torsional Strength of Concrete Beams with GFRP Stirrups

A. Deifalla, Mahmoud Sobhy Khalil, and A. Abdelrahman

ASCE Journal of Composites for Construction
Volume 19, No. 2. April 2015.

Performance of Concrete Beams Reinforced with Basalt FRP for Flexure and Shear

Douglas Tomlinson and Amir Fam

Mechanical Characterization of Basalt FRP Rebars and Long-Term Strength Predictive Model

Andreea Serbescu, Maurizio Guadagnini, and Kypros Pilakoutas

Functionally Graded Adhesive Patch Repairs of Wood Beams in Civil Applications

R. J. C. Carbas, G. M. S. O. Viana, L. F. M. da Silva, and G. W. Critchlow

Experimental Study of RC Beams Strengthened with Prestressed Steel-Wire BFRP Composite Plate Using a Hybrid Anchorage System

Gang Wu, Xing Zhao, Jian Zhou, and Zhishen Wu

Axial Loading Tests and Simplified Modeling of Sandwich Panels with GFRP Skins and Soft Core at Various Slenderness Ratios

Hale Mathieson and Amir Fam

Behavior of FRP-HSC-Steel Double-Skin Tubular Columns under Cyclic Axial Compression

Mohammad Albitar, Togay Ozbakkaloglu, and Butje Alfonsius Louk Fanggi

Compressive Local Buckling of Pultruded GFRP I-Sections: Development and Numerical/Experimental Evaluation of an Explicit Equation

Daniel C. T. Cardoso, Kent A. Harries, and Eduardo de M. Batista

Tensile and Lap-Splice Shear Strength Properties of CFRP Composites at High Temperatures

Duncan Cree, Taras Gamaniouk, Marc Li Loong, and Mark F. Green

Boundary Element Analysis of Fatigue Crack Growth for CFRP-Strengthened Steel Plates with Longitudinal Weld Attachments

Qian-Qian Yu, Tao Chen, Xiang-Lin Gu, Xiao-Ling Zhao, and Zhi-Gang Xiao

Investigation of FRP Lap Splice Using Epoxy Containing Carbon Nanotubes

Eslam M. Soliman, Usama F. Kandil, and Mahmoud M. Reda Taha

Finite Element Modeling of Insulated FRP-Strengthened RC Beams Exposed to Fire

Jian-Guo Dai, Wan-Yang Gao, and J. G. Teng

Fatigue Behavior of Full-Scale Slab Bridge Strips with FRP Reinforcement

Martin Noël and Khaled Soudki

Seismic Strengthening of Masonry-Infilled RC Frames with TRM: Experimental Study

L. Koutas, S. N. Bousias, and T. C. Triantafillou

Torsional Moment Capacity and Failure Mode Mechanisms of Concrete Beams Reinforced with Carbon FRP Bars and Stirrups

Hamdy M. Mohamed, Omar Chaallal, and Brahim Benmokrane

CALL FOR PAPERS

International Journal of Polymer: Special Issue on Applications of Fiber Reinforced Polymer Composites

Lead Guest Editor: Togay Ozbakkaloglu, University of Adelaide

Guest Editors: Jian-Fei Chen, Queen's University Belfast, Scott T. Smith, Southern Cross University and Jian-Guo Dai, Hong Kong Polytechnic University

Fueled by the need to surpass the limitations of conventional materials, recent years have seen a large increase in engineering applications of advanced fiber reinforced polymer (FRP) composite materials in many major industries. While there are numerous advantages offered by FRP composites in various engineering applications, there are still a number of technical and implementation issues that need to be resolved prior to broader acceptance of the application of FRP composites by some engineering communities such as civil construction. This special issue is aimed at disseminating the most recent advances and developments in this exciting field. We invite authors to submit original research and review articles dealing with cutting-edge issues on research and application of FRP composites.

Authors can submit manuscripts via the Manuscript Tracking System at http://mts.hindawi.com/submit/journals/ijps/frpc/

Manuscripts Due: Friday, 5 June 2015

IJPS is an Open Access Journal, publication may be subject to article processing charges.

Upcoming Conferences and Meetings

International Conference on Advances in Composite Materials and Structures, April 13-15, 2015, Istanbul, Turkey. sites.google.com/site/cacmsistanbul2015/

ICCM20 – 20th International Conference on Composite Materials, July 19-24, 2015, Copenhagen, Denmark. www.iccm20.org.

NOCMAT 2015 – Nonconventional Materials: Construction for Sustainability – Green Materials and Technologies, August 10-13, 2015, Winnipeg, Canada. umanitoba.ca/conferences/nocmat2015/

Early Registration before July 1 2015

ICCST/10 – Tenth International Conference on Composite Science and Technology, 2-4 September 2015, Lisbon, Portugal.
http://www.dem.ist.utl.pt/iccst10/

Early Registration before May 15 2015

SMAR 2015 – Third Conference on Smart Monitoring, Assessment and Rehabilitation of Civil Structures , 7–9 September 2015, Antalya Turkey. www.smar2015.org

Early Registration before June 30 2015

ADVANCED COMPOSITES IN CONSTRUCTION

ACIC 2015 – 7th International Conference in the Advanced Composites in Construction, 9–11 September 2015, Cambridge UK. acic-conference.com

CAMX: Composites and Advanced Materials Expo, October 26-29, 2015, Dallas TX, USA. www.thecamx.org

PLSE 2015 – Second International Conference on Performance-based and Lifecycle Structural Engineering, 9-11 December 2015, Melbourne, Australia. plse2015.org

Early Registration before September 16 2015

JOINT CONFERENCE

FRPRCS-12 ***12th International Symposium on Fiber Reinforced Polymer for Reinforced Concrete Structures***, and

APFIS 2015 – 5th ***Asia-Pacific Conference on FRP in Structures***, December 14-16, 2015, Nanjing, China.

http://iiuse.seu.edu.cn/frprcs12_apfis2015/

Early Registration before July 15 2015

Concrete Solutions 2016, 5th International Conference on Concrete Repair, June 20-22, 2016, Thessaloniki, Greece. http://www.concrete-solutions.info/

Abstracts due May 31 2015

7th International Conference on Advanced Composite Materials in Bridges and Structures, August 22-25, 2016 Vancouver, Canada.

CICE 2016 ***8th International Conference on FRP Composites in Civil Engineering***

December 2016, Hong Kong

CICE 2018 ***9th International Conference on FRP Composites in Civil Engineering***

July 2018, Paris

CICE 2014 Proceedings available on IIFC website SOON!

Proceedings of the following official IIFC conferences are archived on the IIFC website, www.iifc-hq.org:

CICE 2014, Vancouver, 20-22 August 2014

CICE 2012, Rome, Italy, 13-15 June 2012

APFIS 2012, Sapporo, Japan, 2-4 February 2012

CICE 2010, Beijing, China, 27-29 September 2010

APFIS 2009, Seoul, Korea, 9-11 December 2009

CICE 2008, Zurich, Switzerland, 22-24 July 2008

APFIS 2007, Hong Kong, 12-14 December 2007

CICE 2006, Miami, USA, 13-15 December 2006

BBFS 2005, Hong Kong, 7-9 December 2005

International Institute for FRP in Construction

Membership Application and Renewal

IIFC Member Number (if applicable): _____

Dr./Mr./Ms./Prof. _____
Surname First/Middle Names

Job Title/Position: _____

Employer/Company: _____

Employer type: ☐ Academic ☐ Corporate ☐ Government ☐ Self-employed ☐ Retired

Address: _____

City: _____ State/Prov./Pref.: _____ Postal/Zip Code: _____

Country: _____ homepage (optional): _____

email: _____ alternate email (optional): _____

Education/Experience: ***Please attach a current resume or CV (new members only)***

I/we wish to join the International Institute for FRP in Construction (IIFC) as a (please tick one box)

☐ Member (US$100) ☐ Student Member (US$25) ☐ Patron Member (US$500)

Patron Membership includes two designated individuals who shall have all the privileges of IIFC membership. If applying for a Patron Membership, please nominate one additional colleague to receive the privileges of membership:

Dr./Mr./Ms./Prof. _____
Surname First/Middle Names

Job Title/Position: _____ email: _____

METHOD OF PAYMENT (Payable in US Funds) Cheques and money orders to be made payable to "IIFC"

☐ Check / Money Order

☐ Visa ☐ Mastercard

☐☐☐☐☐☐☐☐☐☐☐☐☐☐☐☐ ☐☐☐☐
Credit Card No. *Expiration Date*

☐☐☐
CVC number

_____
Name on Credit Card

_____
Signature of Cardholder

For Office Use Only

Date of Receipt: _____
Membership Number: _____
Transaction Date: _____
Amount: _____
Authorization No: _____
Invoice No: _____
Journal Entry No: _____

Submit to: IIFC Administrative Center c/o Queen's University
Department of Civil Engineering, Ellis Hall • 58 University Ave.
Kingston, Ontario, K7L 3N6, Canada
Tel: (613)533-6000 (Ext. 79359) • Fax: (613)533-2128
Email: treasurer@iifc-hq.org • Website: www.IIFC-hq.org

By submitting this application you agree to share your contact information with fellow IIFC members and any conference/organization associated with IIFC.

FRP INTERNATIONAL

the official newsletter of the International Institute for FRP in Construction

FRP International needs your input…

As IIFC grows, we seek to expand the utility and reach of *FRP International*. The newsletter will continue to report the activities of IIFC and focus on IIFC-sponsored conferences and meetings. Nevertheless, we also solicit short articles of all kinds: research or research-in-progress reports and letters, case studies, field applications, book reviews or anything that might interest the IIFC membership. Articles will generally run about 1000 words and be well-illustrated. Submissions may be sent directly to the editor. Additionally, please utilize *FRP International* as a forum to announce items of interest to the membership. Announcements of ***upcoming conferences***, ***innovative research or products*** and ***abstracts from newly-published PhD dissertations*** are particularly encouraged. All announcements are duplicated on the IIFC website (www.iifc-hq.org) and all issues of the *FRP International* are also available in the archive at this site.

FRP International is yours, the IIFC membership's forum. The newsletter will only be as useful and interesting as you help to make it. So, again, please become an *FRP International* author.

International Institute for FRP in Construction Council

Australia	
R. Al-Mahaidi	Swinburne University of Technology
T. Aravinthan	University of Southern Queensland
M. Griffith	University of Adelaide
S.T. Smith	Southern Cross University
T. Yu	University of Wollongong
Canada	
R. El-Hacha	University of Calgary
A. Fam	Queen's University
M. Green	Queen's University
China	
J.G. Dai	The Hong Kong Polytechnic University
P. Feng	Tsinghua University
X. Wang	Southeast University
Y.F. Wu	City University of Hong Kong
W.C. Xue	Tongji University
Denmark	
J.W. Schmidt	Technical University of Denmark
France	
E. Ferrier	Université Lyon 1
Germany	
L. De Lorenzis	Technical University of Braunschweig
Iran	
M. Motavalli	University of Tehran/EMPA, Switzerland
Israel	
R. Eid	Shamoon College of Engineering
Japan	
Z.S. Wu	Ibaraki University
S. Yamada	Toyohashi University of Technology
Poland	
R. Kotynia	Technical University of Lodz
Singapore	
K.H. Tan	National University of Singapore
Switzerland	
T. Keller	Swiss Federal Institute of Technology
UK	
L.A. Bisby	University of Edinburgh
J.F. Chen	Queen's University Belfast
M. Guadagnini	University of Sheffield
T.J. Stratford	University of Edinburgh
S. Taylor	Queen's University Belfast
USA	
C.E. Bakis	Pennsylvania State University
M. Dawood	University of Houston
R. Gentry	Georgia Institute of Technology
N.F. Grace	Lawrence Technological University
I.E. Harik	University of Kentucky
K.A. Harries	University of Pittsburgh
Y. Kim	University of Colorado Denver
F. Matta	University of South Carolina
R. Seracino	North Carolina State University
B. Wan	Marquette University
J. Wang	University of Alabama

International Institute for FRP in Construction Advisory Committee

L.C. Bank	City College of New York
A. Nanni	University of Miami, USA
K.W. Neale	University of Sherbrooke, Canada
S.H. Rizkalla	North Carolina State University, USA
J.G. Teng	Hong Kong Polytechnic University, China
T.C. Triantafillou	University of Patras, Greece
T. Ueda	Hokkaido University, Japan
L.P. Ye	Tsinghua University, China
X.L. Zhao	Monash University, Australia

SMAR 2015 – Third Conference on Smart Monitoring,
Assessment and Rehabilitation of Civil Structures

SMAR 2015

Key dates

Submission of Abstracts	30 November 2014
Abstract Acceptance Notification	15 December 2014
Submission of Full Lengths Papers	31 March 2015
Paper Acceptance Notification	10 June 2015
Submission of Final Revised Papers	15 July 2015
Early Registration	30 June 2015
SMAR 2015 Conference	7 – 9 September 2015

The official language of the conference is English

Registration Fee

Early Bird Registration until 15 June 2015	€ 500.00 and € 250.00 for students
Standard Registration after 15 June 2015	€ 600.00 and € 350.00 for students

Registration fee includes:
Conference proceedings hard cover including extended abstracts and CD with full papers, conference reception and conference dinner, 3-days catering, coffee breaks and lunches
Accompanying persons (none scientists) and visitors to exhibition € 200.00*
*Including: Conference reception, conference dinner, 3-days catering, coffee breaks and lunches

Accommodations see: **www.smar2015.org**

Scientific Tours

to be announced on Conference website: **www.smar2015.org** soon

Conference Secretaries

Pinar Inci (ITU, Turkey)
34469 Maslak, Istanbul/Turkey
Phone: +90 212 285 3795-9
Fax: +90 212 285 61 06

Michèle Koehli (Empa, Switzerland)
CH 8600 Duebendorf, Switzerland
Phone: +41 58 765 42 20
Fax: +41 58 765 11 22

Email: secretariat@smar2015.org

Conference website: www.smar2015.org

İTÜ

EMPA
Materials Science & Technology

İTÜ

EMPA
Materials Science & Technology

İTÜ

EMPA
Materials Science & Technology

Call for Abstracts

SMAR 2015 Antalya

Third Conference on Smart Monitoring,
Assessment and Rehabilitation of Civil Structures
SMAR 2015, Antalya TR
7 – 9 September 2015
Ramada Plaza Antalya
Conference website: www.smar2015.org

Scope

The International Conference on Smart Monitoring, Assessment and Rehabilitation of Civil Structures, SMAR 2015, will provide a forum for international scientists, engineers, enterprisers and infrastructure managers to present and discuss the state-of-the-practice and recent advances in testing and monitoring technology, in structural modeling and assessment methods, and in the application of advances materials for structural rehabilitation. The conference will provide a platform for exploring the potential of international cooperation.

SMAR 2015 is the third conference and will be sponsored jointly by the International Society for Structural Health Monitoring of Intelligent Infrastructure (ISHMII), the International Institute of FRP in Construction (IIFC), RILEM and Turkish Chamber of Civil Engineers (TMMOB).

Topics

Structural Health Monitoring
– Smart sensors
– Wireless sensor networks
– Implementation of structural monitoring
– Monitoring of off-shore structures and oil pipelines
– Monitoring of high rise buildings and bridges
– Advanced inspection and testing
– System identification and model updating
Performance and damage assessment
– Safety evaluation and reliability forecast
Damage control, repair and strengthening
– External strengthening using FRP composites
– Strengthening of concrete, timber and steel structures
– Strengthening of masonry and historic structures
– Confinement of concrete columns
– Near surface mounting reinforcement
– Seismic Retrofitting
Durability issues as related to harsh environments
Special session: Shape memory alloys in civil structures
– Fire protection systems
Practical applications and case studies
Visionary Concepts

Mirko Roš award for the best papers

– 1 paper in the field of "monitoring and assessment" and
– 1 paper in the field of "rehabilitation of civil structures"
Selected best papers will be proposed to be published in a Journal Special Issue dedicated to SMAR 2015 conference

SMAR 2015 – Third Conference on Smart Monitoring,
Assessment and Rehabilitation of Civil Structures

SMAR 2015

Conference Venue

City/Country:	Antalya/Turkey
Date:	7–9 September 2015
Venue:	Ramada Plaza Antalya Gençlik Mahallesi Fevzi Çakmak Cadessi No 22 TR – 07100 Antalya **www.ramadaplazaantalya.com/**

Conference Chairs

Professor Alper Ilki (Istanbul Technical University, Turkey)
Professor Masoud Motavalli (Empa, Switzerland)

Organisation Committee (OC)

Caglar Goksu, ITU, Medine Ispir, ITU, Cem Demir, ITU, Mustafa Cömert, ITU, Robert Widmann, Empa, Bernadette Havranek, Empa

International Scientific Committee

Council members of ISHMII, IIFC and others, to be announced soon on conference website **www.smar2015.org**

Keynote Lecturers

Christoph Czaderski, Empa "Iron based shape memory alloys – a new material for prestressing of concrete structures"
Michael N. Fardis, University of Patras "Experience from the use of the European Standard EN1998-3:2005 on Seismic Assessment and Retrofitting of Buildings and prospects for the future"
Daniele Inaudi, SMARTEC "Point, quasi- and fully-distributed optical fiber sensing: what to use for SHM?"
Koichi Kusunoki, University of Tokyo "Automatic Damage Classification with SHM – We must know the condition of structures right after an earthquake"
Mehdi Saiid Saiidi, CATBI "Smart Materials for Accelerated Bridge Construction in High Seismic Zones"

Sponsors

Local and international companies and institutions providing sensors, monitoring systems, FRP composites and other materials and systems for structural rehabilitation.

Exhibition

Manufacturers and exhibitors in the field of smart monitoring, assessment and rehabilitation of Civil Structures are invited to reserve their stands at the conference SMAR 2015.

Second International Conference on Performance-based and Life-cycle Structural Engineering (PLSE 2015)

9–11 December 2015

Brisbane Convention & Exhibition Centre

Join us in Brisbane in 2015

You are invited to attend the **Second International Conference on Performance-based and Lifecycle Structural Engineering (PLSE 2015)** to be held in Brisbane, Australia from 9th to 11th December 2015.

This upcoming event will be organised by the School of Civil Engineering, The University of Queensland together with the Research Institute for Sustainable Urban Development (RISUD), The Hong Kong Polytechnic University.

PLSE 2015 will provide an international forum for scientific exchanges in performance-based, and lifecycle structural engineering and related topics. Extended versions of selected papers will also be considered for publication in three prestigious international peer-reviewed scientific journals, *Advances in Structural Engineering, Engineering Structures*, and *Fire Safety Journal*. Keynote speakers include:

- Professor Mark A. Bradford
- Professor Gengdong Cheng
- Professor Bruce R. Ellingwood
- Professor Dan Frangopol
- Professor Yozo Fujino
- Professor Guo-qiang Li
- Professor Stephen A. Mahin
- Professor Robert E. Melchers
- Professor David A. Nethercot
- Dr Man-Chung Tang

Visit the Conference website for more information and to join our mailing list:

www.plse2015.org

Key Dates

Abstract submission deadline
25 February 2015

Abstract author notification & Call for full papers
1 April 2015

Full paper submission deadline
1 June 2015

Full paper author notification
3 August 2015

Early bird & author registration deadline
16 September 2015

Abstract Submission Closing 25 February

FRPRCS-12 / APFIS-2015

The 12th International Symposium on Fiber Reinforced Polymers for Reinforced Concrete Structures
& The 5th Asia-Pacific Conference on Fiber Reinforced Polymers in Structures
Joint Conference

(First Announcement and Call for Abstracts)

14-16 December 2015
Nanjing, China

Organized by

International Institute for Urban Systems Engineering
& National and Local Unified Engineering Research Center for Basalt Fiber Production and Application Technology
& School of Civil Engineering
Southeast University

APFIS is the Official IIFC Conference for the Asia-Pacific Region

International Institute for FRP in Construction

FRPRCS-12 / APFIS-2015

14-16 Dec. 2015, Nanjing, China

Topics (Including, but not limited to)

- Characterization of FRP
- New FRP materials/systems/techniques
- Durability, long-term performance of FRP
- Bond behavior
- Confinement
- Seismic strengthening
- Strengthening of concrete, metallic, timber and masonry structures
- Performance under extreme loading
- Advanced numerical models and simulations
- Structures reinforced or prestressed with FRP systems
- Hybrid structures
- All FRP structures
- Structural health monitoring and intelligent sensing
- Codes, standards, guidelines
- Field applications, case studies
- High performance, longevity, and sustainability of structures with FRP

International Scientific Committee (tentative)

R. Al-Ameri, Australia
R. Al-Mahaidi, Australia
T. Aravinthan, Australia
A. Ashour, UK
C.E. Bakis, USA
G. Balazs, Hungary
L.C. Bank, USA
N. Banthia, Canada
A. Belarbi, USA
B. Benmokrane, Canada
L. Bisby, UK
C. Burgoyne, UK
F. Ceroni, Italy
J.F. Chen, UK
J.R. Correia, Portugal
C. Czaderski, Switzerland
J.G. Dai, China
M. Dawood, USA
L. De Lorenzis, Germany
R. El-Hacha, Canada
A. Fam, Canada
P. Feng, China
E. Ferrier, France
S. Foster, Australia
N. F. Grace, USA
M. Griffith, Australia
M. Guadagnini, UK
M. Hadi, Australia
P. Hamelin, France
H. Hao, Australia
I.E. Harik, USA
K.A. Harries, USA
A. Ilki, Turkey
A. Katz, Israel
T. Keller, Switzerland
S.J. Kim, Australia
R. Kotynia, Poland
G. Manfredi, Italy
E. Martinelli, Italy
F. Matta, USA
S. Matthys, Belgium
G. Melo, Brazil
G. Monti, Italy
M. Motavalli, Switzerland
A. Nanni, USA
K.W. Neale, Canada
D. Oehlers, Australia
H. Okamura, Japan
J.A. Oliveira, Portugal
M. Peece, Italy
C. Pellegrino, Italy
M.D.G Pulido, Spain
S.H. Rizkalla, USA
H. Ronagh, Australia
B. Samali, Australia
J.W. Schmidt, Denmark
H.M. Seliem, Egypt
R. Seracino, USA
C. Shield, USA
P. Silva, USA
J.S. Sim, Korea
S.T. Smith, Australia
T.J. Stratford, UK
L. Taerwe, Belgium
K.H. Tan, Singapore
S. Taylor, UK
J.G. Teng, China
L. Torres, Spain
T.C. Triantafillou, Greece
T. Ueda, Japan
T. Uomoto, Japan
B. Wan, USA
Y.F. Wu, China
Z.S. Wu, China
G. Wu, China
X. Wang, China
W.C. Xue, China
S. Yamada, Japan
L.P. Ye, China
T. Yu, Australia
X.L. Zhao, Australia
K. Zilch, Germany

Local Organizing Committee (Southeast University)

Z. S. Wu (Chair), G. Wu (Co-chair), X. Wang (Co-chair), H. Zhu, J. X. Liu, Z. Y. Sun, F. Fang, X. F. Chen, W. J. Zhang, X. Zhao, J. Z. Shi

Key dates

Abstract submission—15th Jan. 2015
Approval of abstracts—15th Feb. 2015
Submission of papers—15th Apr. 2015
Review outcome of papers—15th Jun. 2015
Submission of finalized papers— 15th Aug. 2015

Registration fees

Early Bird (before 15th July)/Normal Registration:
Full 600/700 USD
Student 300/350 USD
Accompanying Person: 250 USD

The registration fee includes IIFC membership, lunches, proceedings and banquet dinner.

Conference website:
http://iiuse.seu.edu.cn/frprcs12_apfis2015/
Contact email: frprcs-apfis2015@seu.edu.cn